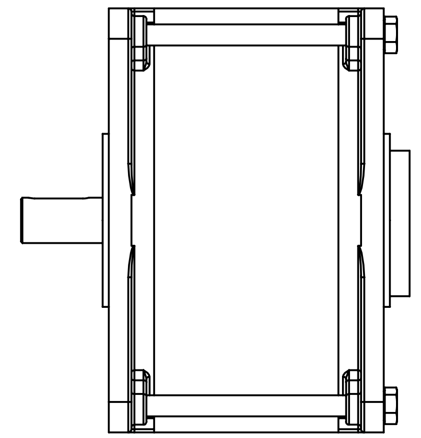

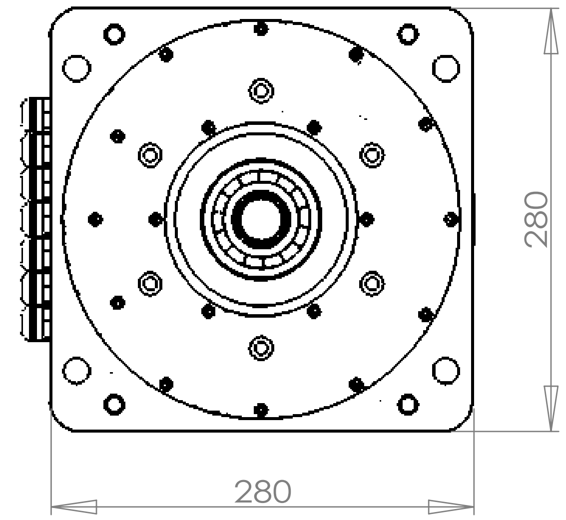

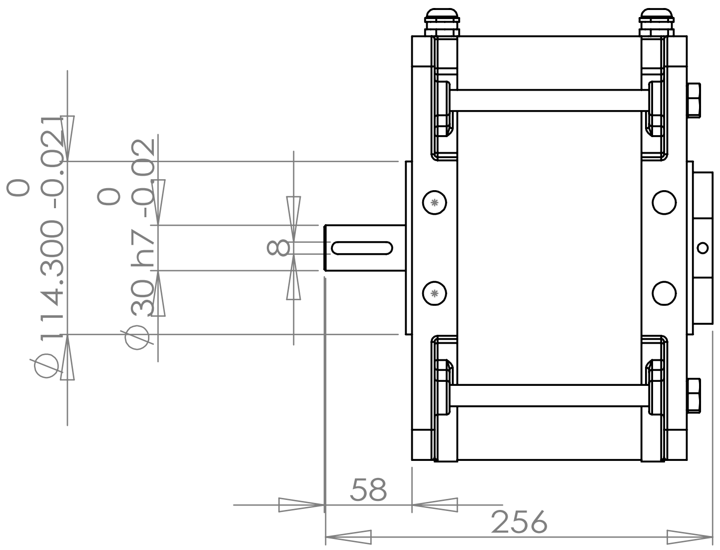

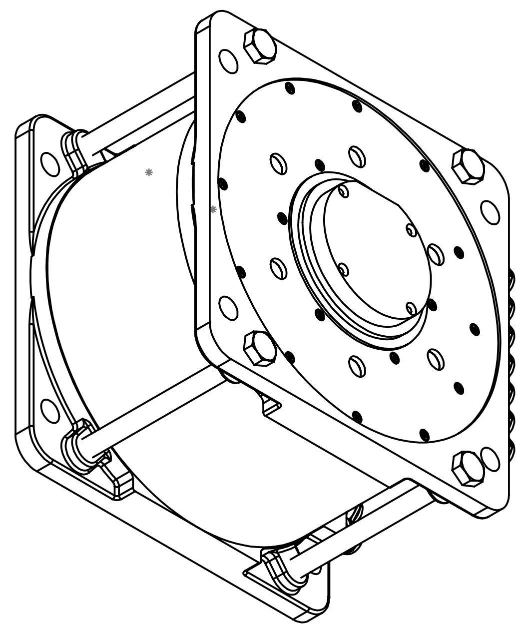

FINISH:

A3